LUMEX®

A Graham-Field Brand

Series FR587W Deluxe Clinical Care Recliner, Extra Wide

Series FR587WH Deluxe Clinical Care Recliner, Extra Wide, with Heat and Massage

Assembly and Operating Instructions

IMPORTANT: READ THIS MANUAL BEFORE OPERATING YOUR LUMEX FR587W / FR587WH DELUXE EXTRA-WIDE CLINICAL CARE RECLINER.

SAVE THIS MANUAL FOR FUTURE USE.

THE MOST CURRENT VERSION OF THIS MANUAL CAN BE FOUND ONLINE AT www.grahamfield.com.

FR587W-INS-LAB-RevB12

CONTENTS

INTRODUCTION 3
INTENDED USE 3
IMPORTANT SAFETY PRECAUTIONS—PLEASE READ BEFORE USE 3
WARNINGS 3
ASSEMBLY 5
UNPACKING 5
PRODUCT DESCRIPTION 5
UPHOLSTERED BACK ASSEMBLY 5
OPERATION 8
TENTE® CASTERS 8
SIDE TABLE OPERATION 9
SIDE PANEL OPERATION 10
RECLINER OPERATION 11
FIRST POSITION (UPRIGHT POSITION) 11
SECOND POSITION (FIRST RECLINE POSITION) 11
THIRD POSITION (SECOND RECLINE POSITION) 11
BACK ANGLE ADJUSTMENT 12
TRENDELENBURG POSITION (ALSO KNOWN AS SHOCK POSITION) 12
GAS SPRING TROUBLESHOOTING GUIDE 13
ADJUSTING CABLE TENSION 13
LUMEX CLINICAL CARE RECLINERS WITH HEAT AND MASSAGE FEATURE 14
INSTALLATION AND OPERATING GUIDE 14
DESCRIPTION 14
CONNECTION 14
MAIN COMPONENTS 14
HEAT AND MASSAGE UNIT SETUP INSTRUCTIONS 15
HEAT AND MASSAGE UNIT OPERATION INSTRUCTIONS 16
HEAT AND MASSAGE UNIT TROUBLESHOOTING GUIDE 17
CARE AND MAINTENANCE 19
EVERY THREE MONTHS 19
UPHOLSTERY MAINTENANCE AND STAIN REMOVAL 19
PERMABLOK3® CARE AND CLEANING GUIDE — ADVANCED VINYL PROTECTION 19
CDC RECOMMENDATIONS 20
TECHNICAL SPECIFICATIONS 22
LIMITED WARRANTY 23

GF Health Products, Inc. is not responsible for typographical errors. All illustrations, specifications, packaging and warranties contained in this literature are based on the latest product information available at the time of printing. The most current product information, including the most current version of this manual, can be found online at www.grahamfield.com.

Graham-Field® and Lumex® are registered trademarks of GF Health Products, Inc.

© 2012, GF Health Products, Inc., All Rights Reserved.

INTRODUCTION

This manual contains assembly, operation, and maintenance instructions for the Lumex Clinical Care Recliners Series FR587W and FR587WH. Read the entire manual carefully before using your recliner, and refer to it during use if you have questions. If you have further questions, please call Graham-Field / Lumex Technical Support at 770-447-1609.

INTENDED USE

Lumex Clinical Care Recliners are intended to make the care, treatment and recovery of patients easier and more comfortable. Lumex Clinical Care Recliners are used in a wide range of healthcare applications including Dialysis, Oncology, Drug Delivery, Same Day Surgery and Post-Operative Recovery. Lumex Clinical Care Recliners are ideal for use in hospitals, clinics and rehabilitation centers.

Lumex Series FR587W and FR587WH supports patient weights up to 450 lb (204 kg) when evenly distributed.

IMPORTANT SAFETY PRECAUTIONS—PLEASE READ BEFORE USE

The safety statements presented in this chapter refer to the basic safety information that the FR587W / FR587WH user must pay attention to and abide by. There are additional safety statements in other chapters or sections, which may be the same as or similar to the following, or specific to the operations. Please note the following special statements, used throughout this manual, and their significance:

⚠ **WARNING: Indicates a potential hazard situation or unsafe practice that, if not avoided, could result in death or serious personal injury.**

⚠ **CAUTION: Indicates a potential hazard or unsafe practice that, if not avoided, could result in minor or moderate personal injury.**

▲ **NOTICE: Indicates a potential hazard or unsafe practice that, if not avoided, could result in product or property damage.**

Info: Provides application recommendations or other useful information to ensure that you get the most from your product.

WARNINGS

⚠ **WARNING: Read this entire manual before assembly or operation.**

⚠ **WARNING: Periodically inspect all parts and replace as needed.**

⚠ **WARNING: Do not use near an open flame, as the chair could be a combustion source, resulting in fire, property damage, and severe physical injury.**

⚠ **WARNING: Service and repair of the Lumex FR587W / FR587WH Deluxe Extra Wide Clinical Care Recliner must be performed by a Graham-Field authorized distributor. GF Health Products, Inc. is not responsible for any consequence resulting from any unauthorized service or repair.**

⚠ **WARNING: The electronics and / or actuator contain no serviceable components. If service is required, the unit must be returned to the factory for repair. DO NOT attempt to open the electronics or actuator or obtain local service; this will void the warranty and may result in damage to the unit. Consult your Graham-Field authorized distributor for further information.**

⚠ **WARNING: This product has a maximum weight capacity of 450 lb (204 kg), EVENLY DISTRIBUTED.**

⚠ **WARNING: Casters must be locked at all times, except during transport.**

⚠ **WARNING: Unauthorized modification of your recliner or the use of non-Lumex replacement parts may change the structure of the recliner and could create a hazardous condition, which may result in serious injury and will void the warranty.**

⚠ **WARNING: GF Health Products, Inc. specifically disclaims responsibility for any bodily injury or property damage which may occur during any use which does not comply with federal, state or local laws or ordinances.**

ASSEMBLY

UNPACKING

1. Check for obvious damage to the carton or its contents. If damage is evident, please notify the carrier and your Graham-Field authorized distributor.
2. Remove all packaging materials from recliner base.

PRODUCT DESCRIPTION

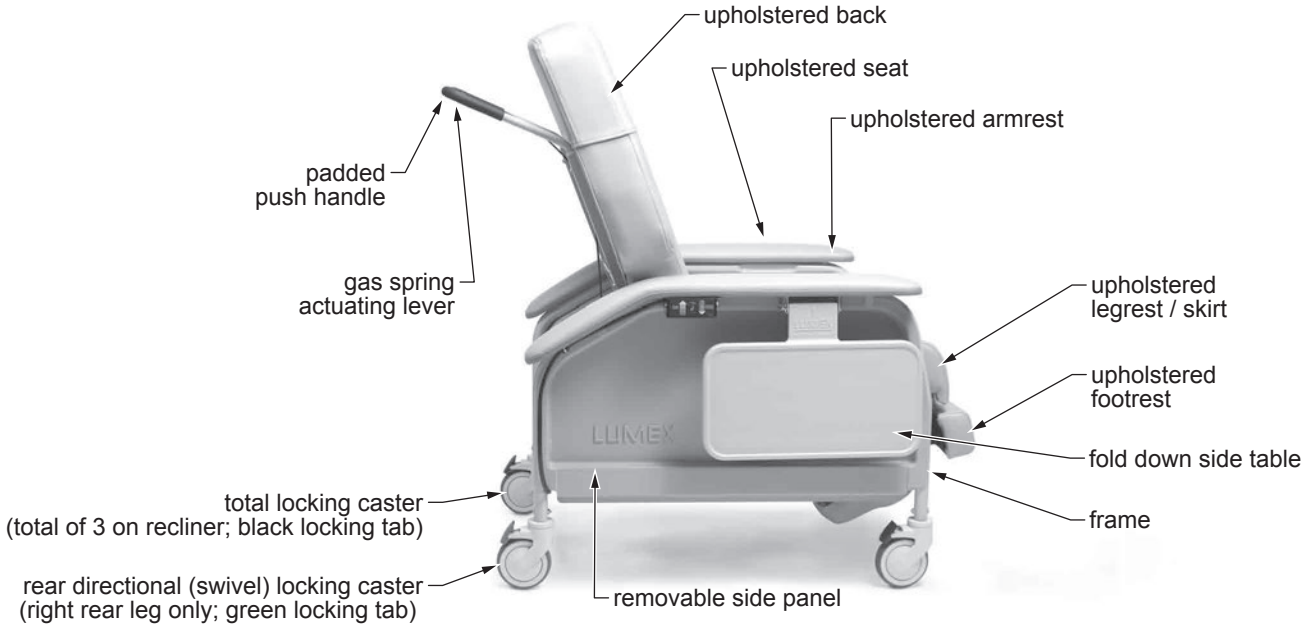

Clinical Care Recliner Series FR587W

Upholstered Back Assembly

1. After removing all components from the carton, engage all four locks on the casters before beginning assembly.
2. See the location of three clevis pins, two ring cotter pins and two large cotter pins at right.

Info: The center clevis pins are 5/16" in diameter. The outside clevis pins are 3/8" in diameter.

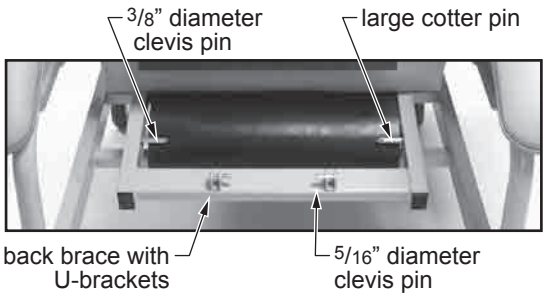

Back Assembly

3. Remove cardboard shipping retainers and tape from around gas spring cylinders. Rotate the hinge section on the gas spring so that it is perpendicular to the upholstered back, as shown at right.

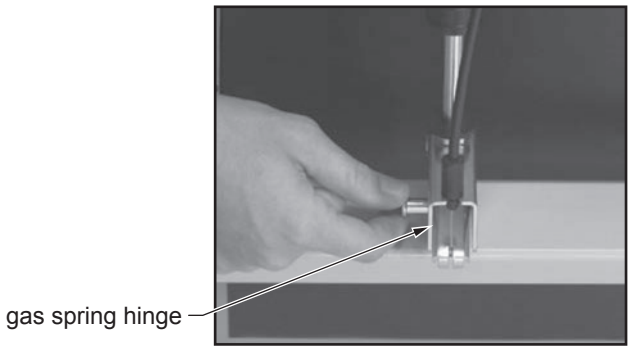

Rotate HInge

4. Remove side panels from frame: Depress the two push buttons located on the lower sides of frame. Pull side panel gently away and down from frame. There are tabs on the frame underneath the armrest that hold the side panel in place.

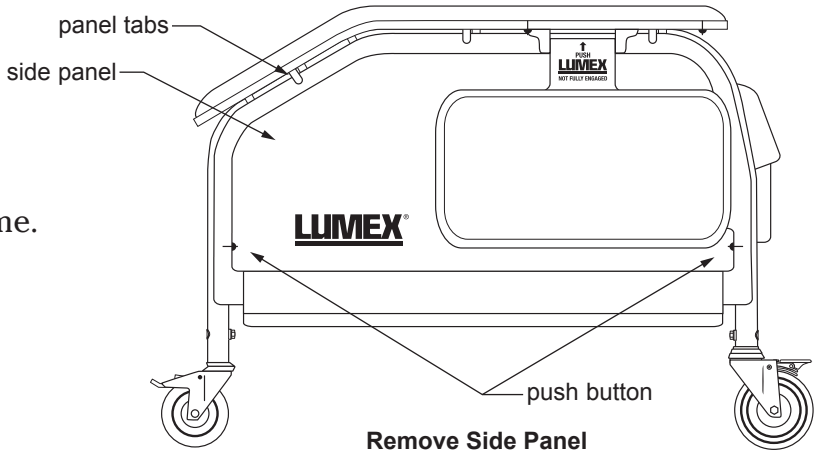

Remove Side Panel

5. Lift the upholstered back from the sides and place it horizontally with the upright back tubes resting on the recliner frame.

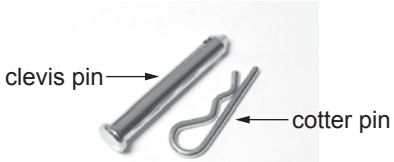

Clevis Pin and Cotter Pin

6. Align the holes on the upright back tubes of the upholstered back with the holes on the seat frame. Place the 3/8" diameter clevis pins through the mounting holes in the frame and back as shown at right.

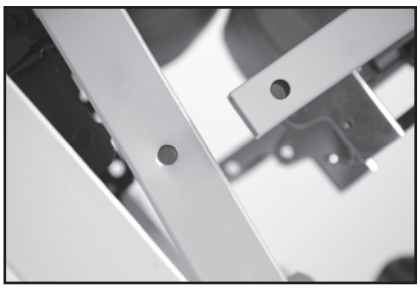

Align Holes

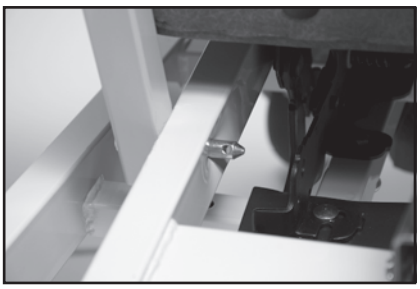

Place Clevis Pins

7. Secure the two clevis pins by placing a large cotter pin through the hole in the clevis pin (one for each side) as shown at right.

Place Cotter Pin

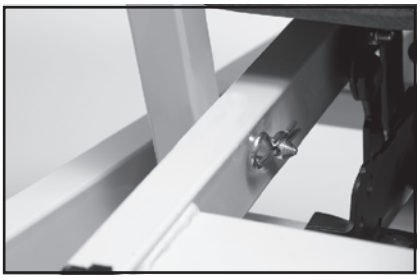

Cotter Pin

8. Raise the upholstered back to vertical position. Tuck the plastic skirt at rear of upholstered back behind seat frame crossbrace. Align the hinges at the bottom of the gas springs with the holes in the U-brackets on the seat frame crossbrace. While holding the back in position with one hand, secure both gas spring hinges to the U-brackets by placing two 5/16"diameter clevis pins through the U-brackets and hinges with the other hand.

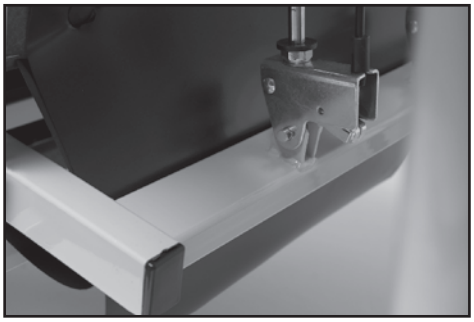

Place Clevis Pins

9. Secure the clevis pins by placing the ring cotter pins through the hole in the clevis pins as shown at right.

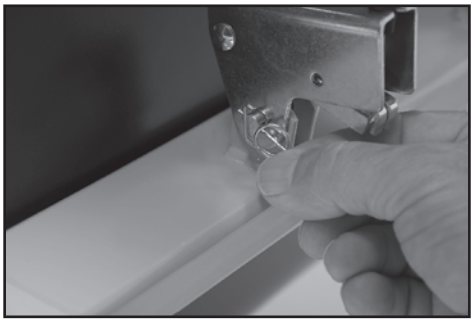

Place Cotter Pins

10. Replace side panels:
Insert side panel into recliner frame by locating the tabs underneath the armrest. Make sure side panel is properly aligned and that the top edge is behind the locking tabs. Press side panel into frame sides. Make sure that both push buttons are protruding into side panel to ensure side panel is locked in place.

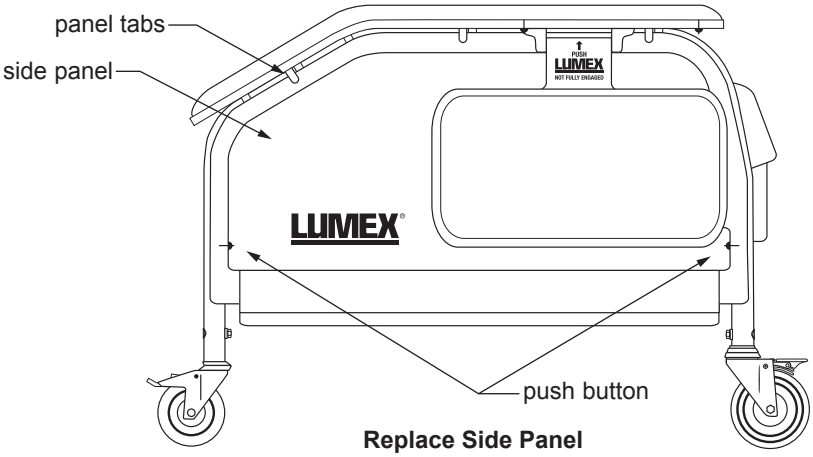

Replace Side Panel

OPERATION

⚠ **WARNING: Disconnection of the device: In case of emergency, always disconnect the device by removing the power cord plug from the power outlet.**

TENTE® CASTERS

⚠ **WARNING: Casters must be locked at all times, except during transport.**

All Lumex Clinical Care Recliners now feature the latest design, all-plastic casters from TENTE. Specifically designed for use in healthcare environments, the new casters are easier to clean, easier to move, and tolerate a wide array of cleaners and chemicals. Each caster is made from high-grade synthetic materials and features a double-ballbearing swivel head. The wheel center is made of polypropylene and the tire tread of TENTEprene (thermoplastic rubber). The gray non-marking tires feature precision ball bearings.

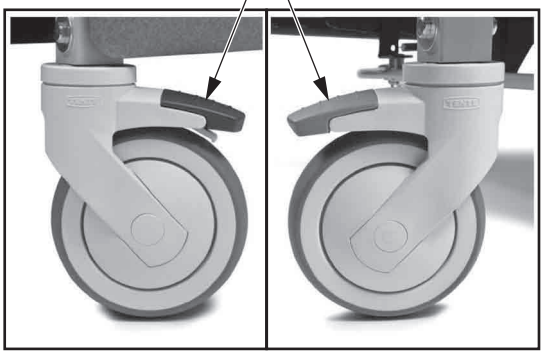

total locking caster | **directional (swivel) locking caster (right rear caster)**

Locking casters: Each Lumex Clinical Care Recliner features three total locking casters, identified by black actuator tabs, that lock both the wheel and the swivel. To activate the total lock, simply press down on the BLACK actuator tab until it locks. To release the total lock, press on the raised portion of the actuator tab until the lever is back in the normal operating position.

Directional (swivel) caster: The fourth caster, located on the right rear position of the recliner, is a directional (swivel) locking caster only. Identified by a green actuator tab, the directional lock caster will lock in one of two 180-degree positions relative to the frame (forward and backward) and allows the recliner to track straight when pushed. To activate the directional lock, simply press down on the GREEN actuator tab until it locks — you may need to move the recliner slightly until the caster locks in a straight line with the recliner frame. To release the directional lock, press on the raised portion of the actuator tab until the lever is back in the normal operating position.

SIDE TABLE OPERATION

To raise table: Raise the side table all the way up and slide in toward the armrest until tabs engage slots in mount bracket. Press down lightly on table to ensure locking tabs are engaged.

To lower table: Lift the side table up slightly until tabs disengage slots and pull table away from armrest. Lower side table to self-storing position.

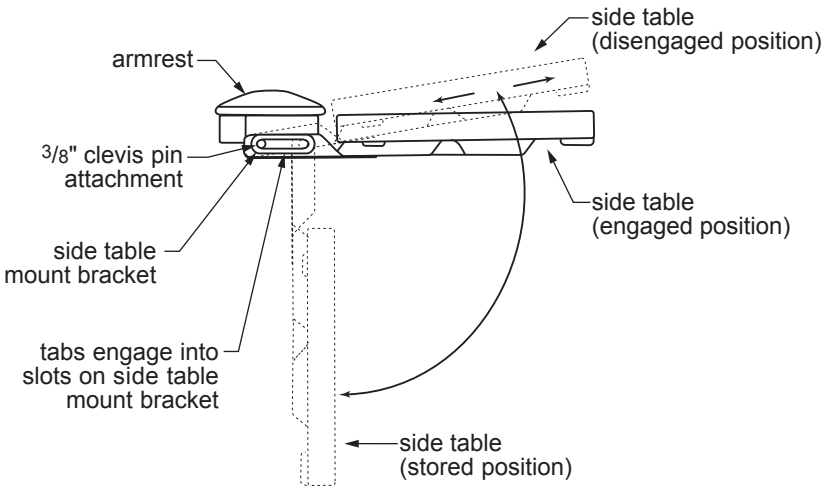

Side Table

SIDE PANEL OPERATION

For easy cleaning and access to the side and underside of the recliner, Lumex Clinical Care Recliners feature easy-to-remove side panels.

To remove side panel:
Depress the two push buttons located on the lower sides of frame. Pull side panel gently away and down from frame. There are tabs on the frame underneath the armrest that hold the side panel in place.

To install side panel:
Insert side panel into recliner frame by locating the tabs underneath the armrest. Make sure side panel is properly aligned and that the top edge is behind the locking tabs. Press side panel into frame sides. Make sure that both push buttons are protruding into side panel to ensure side panel is locked into place.

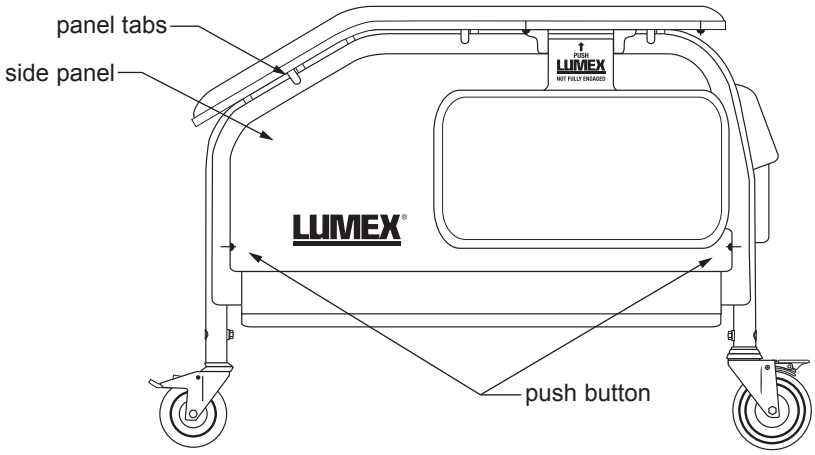

Removable Side Panel

RECLINER OPERATION

The Lumex Series FR587W and FR587WH Recliners feature three positions for patient comfort. The fourth position is a Trendelenburg (or Shock Position) that must be activated by a caregiver. The Trendelenburg Position CANNOT be activated by a patient while in the recliner. In addition, the Series FR587W features a back that can be repositioned via the adjustment lever located on the push handle on the back of the recliner.

First Position (Upright Position)

The first position is the **Upright Position**. This position is ideal for patient transport and can be used to initiate patient treatment / therapy.

Upright Position

Second Position (First Recline Position)

The second position is the **First Recline Position** and is also known as the "TV" position. This position is ideal for patient treatment, rest and reading.

First Recline Position
(TV Position)

To Achieve Second Position / First Recline Position:

- Reclining by patient: Place hands on armrests and push body against recliner back to recline yourself to desired position. To bring yourself up, place hands on armrests and pull yourself up while leaning your body forward, away from the recliner back, while at the same time pushing down evenly on the footrest with your legs.
- Reclining by attendant: Standing on either side of the recliner, grasp the armrest with one hand and the push handle with the other hand. Push back on push handle to recline. To return, grasp push handle and pull forward to raise the recliner's back.

Second Recline Position
(Full Recline Position)

▲ **NOTICE: DO NOT use the footrest by itself to return the recliner to an upright position from any recline position. Doing so may damage the recliner mechanism. Please follow the instructions above to operate the recliner.**

Third Position (Second Recline Position)

The third position is the **Second Recline Position** and is also known as the "Full Recline" position. This position is ideal for patient treatment, rest and reading.

To Achieve Third Position / Second Recline Position:

- By the patient: From the First Recline Position, continue to push against the back by placing your hands on armrests and continue to recline yourself to the Second Recline Position. To bring yourself up, place hands on armrest and pull yourself up while leaning your body forward away from the recliner back while at the same time pushing down evenly on the footrest with your legs.
- Reclining by attendant: Standing on either side of the recliner, grasp the armrest with one hand and push handle with the other hand. Push back on push handle to recline. To return, grasp push handle and pull forward to raise the recliner back.

Info: Due to the 450 pound weight capacity (when evenly distributed) the FR587W Recliner has two gas pistons to assist in the recline and return of the back. One piston assists during the rearward movement of the back, the other piston assists during the return of the back to an upright position. For this reason, in order for the gas piston to operate properly, a person of at least 150 lb (68 kg) should be sitting in the recliner.

Back Angle Adjustment

For added comfort, the back angle of the Series FR577RG and FR577RGH can be adjusted independently of the seat position. From any of the previous positions, actuate the lever located on the rear push handle and position the back to desired angle. To return back to standard position, actuate the lever and move back to desired position.

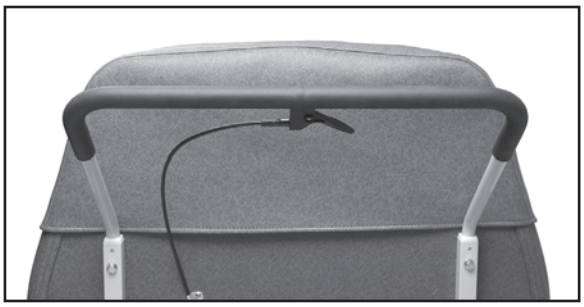

Lever

Trendelenburg Position (Also Known as Shock Position)

Info: This position can only be achieved by a caregiver.

Standing at the back of the recliner, grasp the push handle with one hand while actuating the Lever located on the rear push handle with other. Slowly guide the back down fully until it stops and release the lever. If the articulating headrest is in the forward position, push back so that it is even with the back of the recliner. **Trendelenburg Position can be obtained from any position.**

Trendelenburg Position
(Shock Position)

To bring recliner out of Trendelenburg, stand at the back of the recliner and actuate the lever shown in upper right picture. Slowly guide the back upright and release the lever. The recliner can then be placed in the desired position.

GAS SPRING TROUBLESHOOTING GUIDE

Info: gas springs have been pre-adjusted at factory

The gas spring on your recliner provides counterbalancing forces, and is self-locking for infinite, precise positioning. Unlocking the gas spring is controlled by actuating the lever located on the padded push handle on the back of the recliner. When the lever is actuated it pulls on the cable which in turn pulls on a hinge, depressing a button at the end of the gas spring rod. If the gas spring does not unlock when the lever is actuated or if it remains permanently unlocked when the lever is actuated, the cable must be adjusted.

Adjusting Cable Tension

1. Remove the one screw and cable clip which secure the cable to the upholstered back. Remove the gas spring from the recliner by disassembling the two ring cotter pins and the two clevis pins that secure the gas spring to the back / frame.
2. Lower the back until it rests on the stop bars on the recliner frame. Loosen the lock nut on the gas spring.
3. Hold the hinge assembly while turning the gas spring until the cable just becomes taut. Back off the gas spring an additional half turn.

Info: If the gas spring was not unlocking when the lever was actuated, the gas spring must be turned clockwise. If the gas spring was not locking when the lever was released, the gas spring must be turned counter-clockwise.

4. Retighten the lock nut.
5. Reassemble the gas spring to the back of the recliner by replacing the clevis pins, bridge pins, and re-attach cable to back of recliner with the screw and cable clip.
6. Actuate the recliner in accordance with the operating instructions to verify correct adjustment.

Adjusting Cable Tension 1

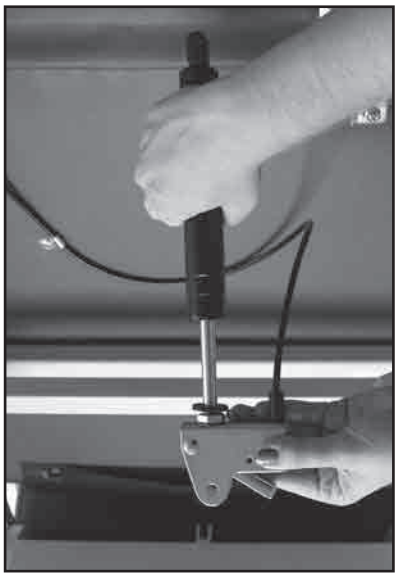

Adjusting Cable Tension 2

LUMEX CLINICAL CARE RECLINERS WITH HEAT AND MASSAGE FEATURE

INSTALLATION AND OPERATING GUIDE

Series FR587WH

Tools required: 1/4" hex wrench and Phillips Screwdriver

⚠ **WARNING: Important! Read and understand these instructions before assembling or using the Specialty Healthcare Seating Heat and Massage Unit. If you do not understand any part of these warnings, cautions or instructions, contact a healthcare professional for direction in the use of this product. If the Heat and Massage Unit is not properly assembled, personal injury and damage to the Heat and Massage Unit could result.**

⚠ **WARNING: The recliner seat and back heating elements are wired to operate in series only. Do not change the system wiring in any way.**

⚠ **WARNING: If components are damaged or missing, contact your Graham-Field authorized distributor immediately. DO NOT use substitute parts. Use only Lumex replacement parts. The use of non-Lumex replacement parts could cause personal injury, property damage, and void the warranty.**

⚠ **WARNING: GF Health Products, Inc. assumes no responsibility for any damage or injury caused by improper assembly or use of this product.**

Description

The Lumex Specialty Healthcare Seating Heat and Massage Unit is a low-voltage (12V) Heat and Massage Unit, controllable by the user and / or caregiver, designed to enhance the comfort of the patient / resident during the use of Lumex Clinical Care Recliners. The Heat and Massage Unit offers three levels of seat and back heat, as well as a gentle or firm massage function for just lower back or both lower and upper back.

Connection

The Heat and Massage Unit comes pre-installed in Lumex Clinical Care Recliners with the Heat and Massage Option (FR587WH). During recliner shipment, the Heat and Selector Switch connections are disconnected. Several easy connections are all that is required to make the unit functional.

Main Components

1. The Selector Switch (shown at right), in the switch box mounted on the right side of the recliner underneath the armrest, is a single multi-position switch that activates both the **Heat** and **Massage** functions.

Selector Switch (Mounted Underneath Right Armrest)

2. The control module, the brains of the system, is inside the junction box. Both are shown at right.
3. The power supply, which has an 8-foot power cord that plugs into the wall power outlet, is shown at right.

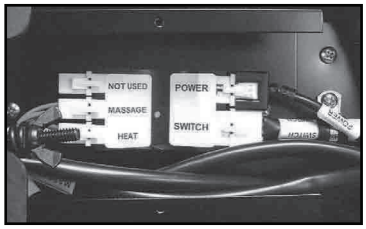

Control Module (Junction Box Cover Removed)

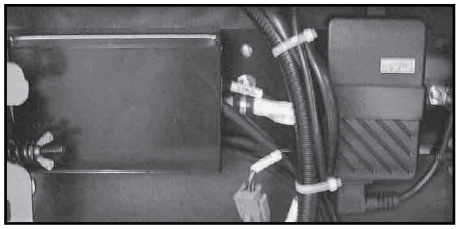
Junction Box

Power Supply

Heat and Massage Unit Setup Instructions

⚠ **CAUTION: To prevent personal injury and damage to the recliner always obtain assistance when positioning the recliner as instructed in the following sections.**

1. Install the back assembly and gas spring on the seat frame with the clevis pins and clips supplied with the recliner as indicated previously in the recliner Assembly and Operating Manual.
2. Remove the left side table (on the side opposite the mounted switch box) from the recliner to prevent damage to it during setup: Withdraw the ball lock pin, shown at right, and set ball lock pin and table aside.

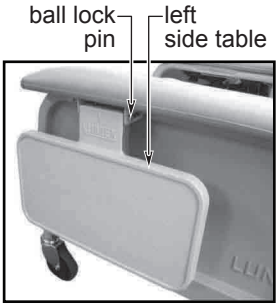

Remove Left Side Table

3. Place a protective cover or drop cloth on your workbench or floor to protect the recliner frame finish and upholstery. With assistance, carefully roll the recliner and rest it on its left side to provide access to the seat bottom, as shown at right. If desired, for better access, you may roll the recliner completely upside down. Carefully extend the footrest partway for access to the components, as shown at right.

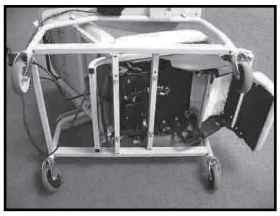
Roll Recliner onto its Left Side

⚠ **WARNING: DO NOT place your hands in the path of the moving recliner mechanism. Moving parts could cause personal injury.**

4. Use a 1/4" hex wrench to remove the two hex head screws that secure the junction box cover (see picture of junction box at top of page). Remove the junction box cover to expose the control module.
5. Insert the cable connector labeled SWITCH through the bushing in the plastic skirt at the bottom of the back cushion as shown at right.

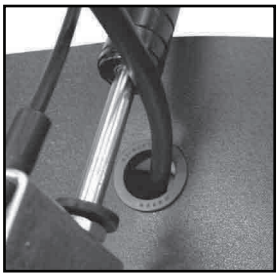
Insert Cable Connector Labeled SWITCH Through Bushing

6. Insert the cable connector labeled SWITCH into the control module connector also labeled SWITCH (see picture of control module at top of page) until its locking tab snaps into place.
7. See picture at right. Use Phillips screwdriver to remove the screw that secures the cushioned cable clamp. Remove the clamp and place it around the switch box cable. Slide the clamp over the cable until the holes in the clamp tabs are in line with the screw, then pinch them closed. Insert the screw through the clamp tabs, then reinstall the screw and tighten it with a Phillips screwdriver.

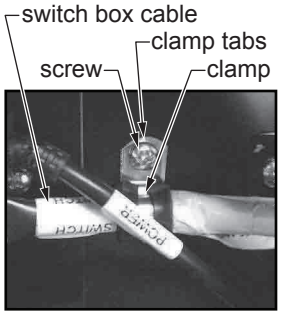

Secure Switch Box Cable Clamp

8. Route the cables from the back cushion between the rear seat frame crossbar and seat bottom.

9. Insert the Y-cable connector labeled UPPER into the back cushion cable connector also labeled UPPER until its locking tabs snap into place, as shown at right.
10. Insert the Y-cable connector labeled LOWER into the back cushion cable connector also labeled LOWER until its locking tabs snap into place, as shown at right.
11. Insert the Y-cable connector labeled MASSAGE into the control module connector also labeled MASSAGE (see picture of control module at top of previous page) until its locking tab snaps into place.
12. Insert the seat cushion cable connector labeled HEAT A into the back cushion cable connector also labeled HEAT A until its locking tabs snap into place, as shown at right.

Connect Upper and Lower Cables

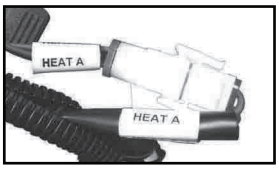

Connect HEAT A Cables

13. Insert the cable connector labeled HEAT into the control module connector also labeled HEAT (see picture of control module at top of previous page) until its locking tab snaps into place.
14. Place the cable labeled HEAT A inside the junction box. Replace the junction box cover; replace the two hex head screws that secure the junction box cover (see picture of junction box at top of previous page). Use a 1/4" hex wrench to secure the screws.
15. Gather loose cable sections and secure them with the plastic cable ties furnished (see picture of junction box at top of previous page).
16. With assistance, carefully return the recliner to its upright position.
17. Reinstall the left side table with the ball lock pin.
18. The Heat and Massage Unit is now ready for operation. Instructions for use follow.

▲ **NOTICE: Before rolling the recliner, ensure the power cord is unplugged from the AC outlet.**

Heat and Massage Unit Operation Instructions

1. Plug the power supply cord into any grounded outlet.
2. The Heat and Massage Unit is operated using the single multi-position selector switch located on the right side of the recliner underneath the armrest. The Heat and Massage Functions can be operated independently. The selector switch faceplate is shown at right.
3. Press the selector switch UP to activate the HEAT FUNCTION.
4. Press the selector switch DOWN to activate the MASSAGE FUNCTION.
5. The selector switch has THREE HEAT SETTINGS and FOUR MASSAGE SETTINGS as follows:

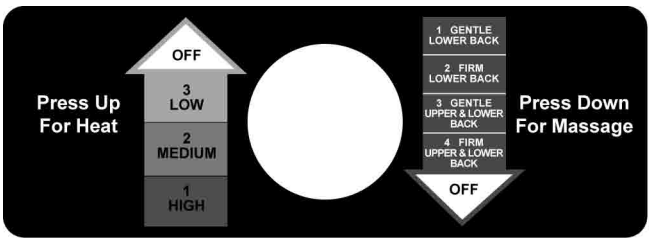

6. HEAT FUNCTIONS:
   a. Press selector switch UP for **Setting 1: High Heat**, 106°F (41°C), brightest LED
   b. Press selector switch UP AGAIN for **Setting 2: Medium Heat**, 104°F (40°C), bright LED
   c. Press selector switch UP AGAIN for **Setting 3: Low Heat**, 100°F (37°C), dim LED
   d. Press selector switch UP AGAIN: Heat function shuts off.
   e. There is a small red indicator light, which illuminates only during the Heat function, in the selector switch. The light's brightness is determined by the Heat level being used: **Brightest = High Heat; Dimmest = Low Heat**.
7. MASSAGE FUNCTIONS:
   a. Press selector switch DOWN for **Setting 1: Gentle Lower Back Massage**
   b. Press selector switch DOWN AGAIN for **Setting 2: Firm Lower Back Massage**
   c. Press selector switch DOWN AGAIN for **Setting 3: Gentle Upper and Lower Back Massage**
   d. Press selector switch DOWN AGAIN for **Setting 4: Firm Upper and Lower Back Massage**
   e. Press selector switch DOWN AGAIN: Massage function Shuts Off.
8. The Heat and Massage Unit automatically shuts off at the following times:
   a. HEAT FUNCTION: After one hour of continuous use at the same level
   b. MASSAGE FUNCTION: After fifteen minutes of continuous use at the same level
   c. To restart the Heat and Massage Unit, follow the instructions above.

Heat and Massage Unit Troubleshooting Guide

The cables and connections need to be validated. This will require the services of a maintenance person and a clear working area.

1. INSPECTION: Perform the following checks. If a working recliner of the same model is available, it should be used for comparison.
2. Is the AC cord properly connected to the power supply? Is the cable from the power supply to control module junction box in place?
3. With the power supply AC cord plugged into a live wall outlet, does the small light to the left of the white seat symbol (located on the switch) light up when the switch is pressed repeatedly or is there any indication of massage operation?

⚠ **WARNING: Disconnect the power cord from the wall outlet before performing the following steps!**

   a. Is the switch seat symbol oriented so that the back is vertical with the three arrows pointing up? Is the switch loose in the box?
   b. Is there any sign of external damage to the switch, switch box or the surrounding area?
   c. Is there any sign of external damage to the recliner?
   d. Do any of the cables show any sign of damage or pinch points?
   e. Are all cable connections to the control module (in the junction box) in place per the instructions? Are the connectors fully engaged?
   f. Are any of the connectors damaged?

g. Are the wires within the connectors attached to the pins? Each wire may have to be tugged lightly to check if the wire is still crimped to the pin.

4. POST-INSPECTION:
   a. If improper or loose connections are found, reconnect them firmly (unless a loose wire has been found). Plug the power supply AC cord into a live wall socket and operate the unit through all functions.
   b. If the switch seat symbol is rotated or there is evidence of damage to the box and cable notify Graham-Field so that a switch box and cable can be sent for replacement.
   c. If damage to any other electrical cable or component, or disconnected wires are found, please notify Graham-Field.
5. ACTIONS:
   a. If full operation is restored, please advise Graham-Field of your successful outcome.
   b. If the fault cannot be corrected by simple re-connection, please inform Graham-Field of the results of your inspection in detail so that we may determine the appropriate action to be taken.

   If you have any questions about the setup and / or operation of the Heat and Massage Unit, please call the Graham-Field Technical Support Group at 770-447-1609.

CARE AND MAINTENANCE

⚠ **WARNING: Inspect all components periodically and replace as needed.**

EVERY THREE MONTHS

- Check and clean casters.
- Tighten bolts in each leg that secure caster into frame.
- Check brakes on casters.
- Check and clean lock recline mechanism.
- Check recliner mechanism for operation in all positions, including Trendelenburg Position, with assistant seated in recliner.

UPHOLSTERY MAINTENANCE AND STAIN REMOVAL

- Ordinary dirt: wash with warm water and a mild soap or detergent.
- Stubborn dirt: using a soft bristle brush, wash with warm water and a mild soap or detergent.
- Ground-in dirt: scrub with powdered cleanser or similar detergent.
- Chewing gum: scrape carefully; remove with kerosene or naphtha.
- Nail polish and remover: Blot immediately to prevent damage.
- Ball point pen: blot immediately with a white cloth dampened in water or mineral oil.
- Paint, shoe polish, heel marks: remove immediately! Use a white cloth dampened in kerosene, naphtha or turpentine. Do not use paint remover or liquid brush cleaners.
- Tars, asphalt, creosote: remove to prevent staining. Clean area with kerosene or naphtha.

⚠ **WARNING: When using kerosene or naphtha, do so in a well ventilated area and keep it away from fire, flame, and recliner occupant.**

- Waxing and refinishing: improves wearability. Use any quality paste wax.
- A diluted solution of 10% (or less) of bleach or Clorox may be used when cleaning this recliner.

PERMABLOK3® Care and Cleaning Guide — Advanced Vinyl Protection

- Step 1 (eye shadow, mascara, grease, black felt tip pen, crayon, chocolate, suntan lotion, hair and body oils): remove excess spill with a damp cloth. Clean with a 1:1 mix of Ivory® liquid soap and water. Next, rinse with clean water and dry.
- Step 2 (red lipstick): use a straight application of concentrated cleaners such as Formula 409® or Fantastik® spray cleaner. Wipe with a clean cloth, rinse with water, and dry.
- Step 3 (blood, urine, feces, oil base paint, tar, and asphalt): use a 1:1 mix of ammonia and water, or a 1:4 mix of bleach and water. Rinse with clean water and dry.
- Step 4 (all other tough stains): use a straight application of naphtha (lighter fluid). Rinse thoroughly with clean water and pat surface dry. If the stain persists, go to step 5.
- Step 5: use a 1:1 mix of isopropyl alcohol and water. If the stain persists, use straight alcohol. Rinse thoroughly with clean water and pat dry.

Info: For cleaning that requires step 4 or 5, use a soft cotton cloth saturated with the cleaning material and rub the stain in circles 10 times. Pat dry with another soft cotton cloth and check the results.

The information published in this care guide refers to the performance of PERMABLOK3 products in specific tests conducted under laboratory conditions. Results may vary under actual conditions.

This information is not a guarantee and does not relieve the user from the responsibility of the proper and safe use of the product and all cleaning agents. The use of certain agents can be harmful to the surface appearance and lifespan of vinyl. Spradling, its agents, and assigns assume no responsibility resulting from the use of such cleaning agents to the vinyl.

Please check compatibility when using this product in combination with painted or varnished surfaces.

PERMABLOK3 is a registered trademark of Spradling Holdings, Inc.
Ivory is a registered trademark of Procter and Gamble
Formula 409 is a registered trademark of The Clorox Company
Fantastik is a registered trademark of S.C. Johnson & Son, Inc.

Spradling International is not sponsored by, affiliated with, or endorsed by such trademark owners.

CDC RECOMMENDATIONS

CLEANING AND DISINFECTING STRATEGIES FOR ENVIRONMENTAL SURFACES IN PATIENT-CARE AREAS FOR VINYL UPHOLSTERY, WALL COVERINGS AND FLOORING

- Select EPA-registered disinfectants, if available, and use them in accordance with the manufacturer's instructions.
- Do not use high-level disinfectants / liquid chemical sterilants for disinfection of either noncritical instruments and devices or any environmental surfaces; such use is counter to label instructions for these toxic chemicals.
- Follow manufacturers' instructions for cleaning and maintaining noncritical medical equipment.
- In the absence of a manufacturer's cleaning instructions, follow certain procedures:
  - Clean noncritical medical equipment surfaces with a detergent / disinfectant.
  - Do not use alcohol to disinfect large environmental surfaces.
  - Use barrier protective coverings as appropriate for noncritical surfaces that are:
    - Touched frequently with gloved hands during the delivery of patient care.
    - Likely to become contaminated with blood or body substances.
    - Difficult to clean (e.g., computer keyboards).
- Keep housekeeping surfaces (e.g., floors, walls, tabletops) visibly clean on a regular basis and clean up spills promptly.
- Use a one-step process and an EPA-registered hospital detergent / disinfectant designed for general housekeeping purposes in patient-care areas where:
  - Uncertainty exists as to the nature of the soil on the surfaces (whether it is blood or body fluid or just normal dust or dirt).
  - Uncertainty exists regarding the presence of multi drug resistant organisms on such surfaces.

- Detergent and water are adequate for cleaning surfaces in nonpatient-care areas (e.g., administrative offices). Clean and disinfect high-touch surfaces on a more frequent schedule than minimal-touch housekeeping surfaces. Clean walls, blinds, and window curtains in patient-care areas when they are visibly dusty or soiled.
- Do not perform disinfectant fogging in patient-care areas.
- Avoid large-surface cleaning methods that produce mists or aerosols, or disperse dust in patient-care areas.
- Follow proper procedures for effective uses of mops, cloths, and solutions.
  - Prepare cleaning solutions daily or as needed, and replace with fresh solution frequently according to facility policies and procedures.
  - Change the mop head at the beginning of each day and also as required by facility policy, or after cleaning up large spills of blood or other body substances.
  - Clean mops and cloths after use and allow to dry before reuse; or use single-use, disposable mop heads and cloths.
- When performing low- or intermediate-level disinfection of environmental surfaces in nurseries and neonatal units, avoid unnecessary exposure of neonates to disinfectant residues on these surfaces by using EPA-registered germicides in accordance with manufacturers' instructions and safety advisories.

TECHNICAL SPECIFICATIONS

Overall Height	50"
Overall Width	33"
Overall Depth	36"
Width Between Arms	23"
Arm Height from Floor	26 1/2"
Arm Height from Seat	8"
Seat Height	21 1/2"
Seat Width	23 1/2"
Seat Depth	20 1/2"
Depth Fully Reclined in Trendelenburg	76"
Width with Both Side Tables in Upright Position	53"
Shipping Weight	138 1/2 lb
Maximum Weight Capacity	450 lb, EVENLY DISTRIBUTED

For complete technical specifications, please call the Graham-Field Technical Support Group at 770-447-1609.

LIMITED WARRANTY

GF Health Products, Inc. ("Graham-Field") warrants the FR587W Deluxe Extra Wide Clinical Care Recliner and FR587WH Deluxe Extra Wide Clinical Care Recliner with Heat and Massage against manufacturing defects in materials and workmanship as listed below:

Welded Frame..... Lifetime limited
Heat and Massage Unit..... Two year limited
Upholstery ..... One year limited
All Other Components..... Three year limited

If a product is deemed to be under warranty, GF Health Products, Inc. shall provide, at its option, (1) replacement of any defective part or product or (2) a credit of the original selling price made to GF Health Products, Inc.'s initial customer. The warranty does not include any labor charges incurred in replacement part(s) installation or any associated freight or shipping charges to GF Health Products, Inc.

The warranties contained herein contain all the representations and warranties with respect to the subject matter of this document, and supersede all prior negotiations, agreements and understandings with respect thereto. The recipient of this document hereby acknowledges and represents that it has not relied on any representation, assertion, guarantee, warranty, collateral contract or other assurance, except those set out in this document.

GF Health Products, Inc.
2935 Northeast Parkway
Atlanta, Georgia 30360 USA

Telephone: 770-368-4700
Fax: 770-368-2386
Technical Support: 770-447-1609

GRAHAM-FIELD

www.grahamfield.com